NEMA 4, 12 STYLE-LINE ENCLOSURES

Austin Style-Line enclosures are Underwriters Laboratories Listed and are designed to provide a degree of protection against windblown dust and rain, splashing water, hose-directed water and damage from external ice formation.

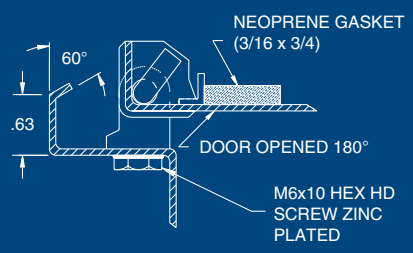

SECTION X-X

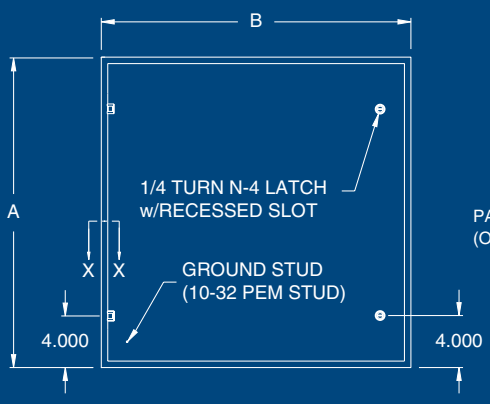

FRONT VIEW

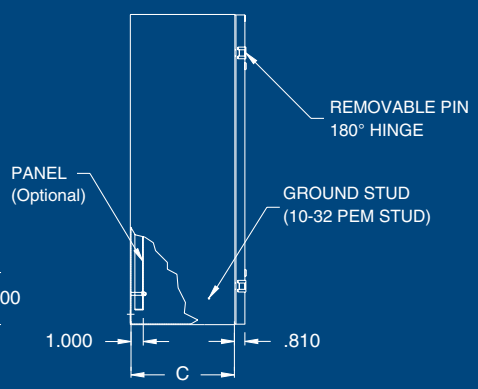

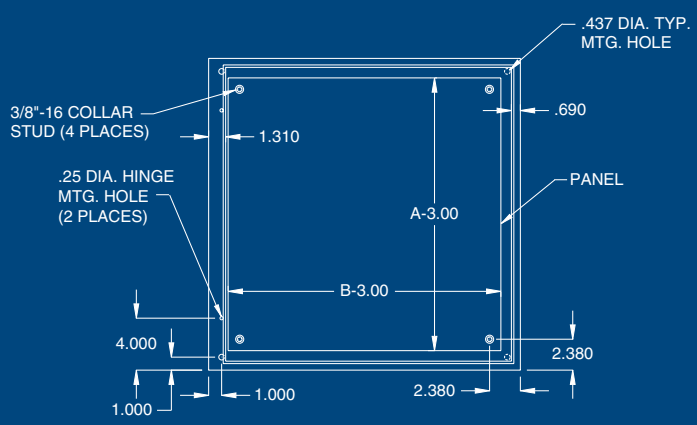

FRONT VIEW w/DOOR REMOVED

Construction:

- Fabricated in accordance with UL specifications from UL approved gauge steel.
- Continuously welded seams ground smooth.
- Standard collar studs for mounting optional panel.
- Mounting holes in back of enclosure for direct mounting or for optional external mounting feet.
- Enclosure opening has a rolled lip to exclude liquids and contaminants.
- Doors can be easily removed by pulling captive hinge pins.
- Neoprene gasket attached to door with oil resistant adhesive.
- Grounding stud in body.
- Door stiffener and/or body stiffener required for larger sizes.
- Quarter turn latches for enclosures up through 36".
- Three-point latch on enclosures over 36".

INDUSTRY STANDARDS

UL 50	Types 4 & 12
UL 508	Types 4 & 12
CUL	Types 4 & 12
NEMA	Types 4 & 12

Austin Electrical Enclosures
Post Office Box 2320
Yadkinville, NC 27055

Phone: 336.468.2851
800.288.2851

Finish:

Austin Style-Line enclosures are provided standard with an ANSI 61 gray polyester powder coating inside and out. Stainless steel Style-Line enclosures are provided standard in Type 304 stainless steel. Optional panels are painted white.

Options:

- Special finishes.
- Handles or inserts

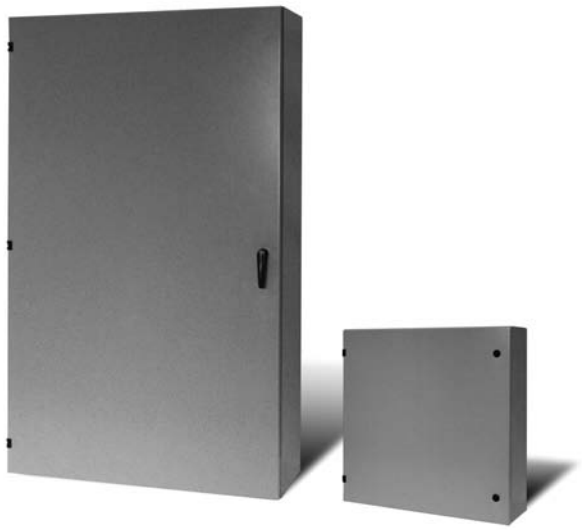

NEMA 4, 12 STYLE-LINE ENCLOSURES

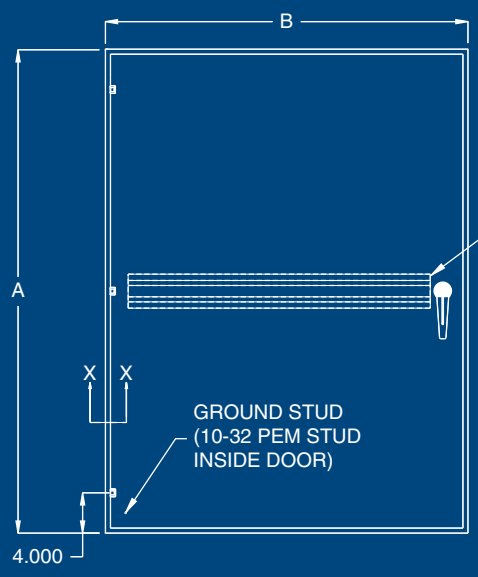

FRONT VIEW

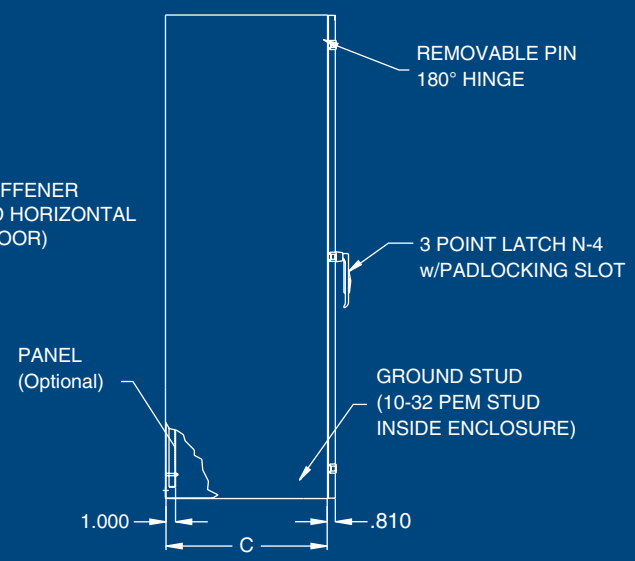

LEFT SIDE VIEW

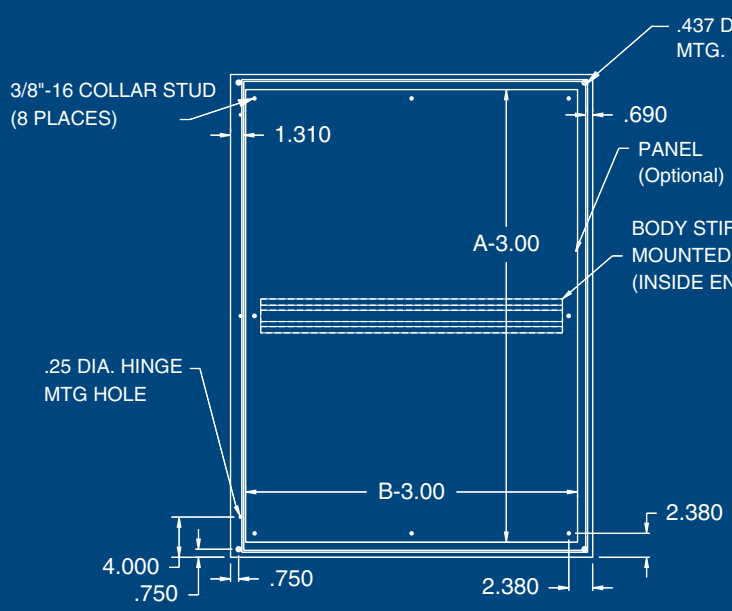

FRONT VIEW w/DOOR REMOVED

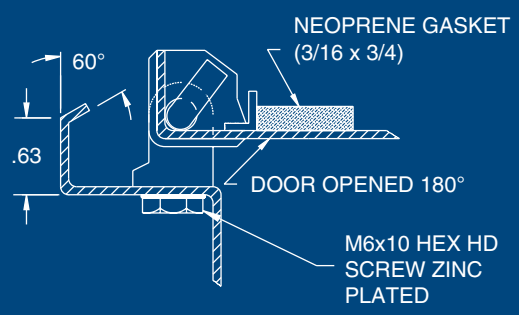

SECTION X-X

INDUSTRY STANDARDS

UL 50	Types 4 & 12
UL 508	Types 4 & 12
CUL	Types 4 & 12
NEMA	Types 4 & 12

Austin Electrical Enclosures
Post Office Box 2320
Yadkinville, NC 27055

Phone: 336.468.2851
800.288.2851

NEMA 4, NEMA 12
STYLE-LINE ENCLOSURES

Catalog Number	Catalog Number Stainless Steel	Enclosure Size (AxBxC)	Weight	Panel Catalog Number	Door Stiffener	Body Stiffener	Hinge Qty.	Latch Qty.
AB-12126SL	AB-12126SLX	12x12x6	13	AB-1212TP	-	-	2	1
AB-16126SL	AB-16126SLX	16x12x6	16	AB-1612TP	-	-	2	1
AB-16166SL	AB-16166SLX	16x16x6	19	AB-1616TP	-	-	2	1
AB-20166SL	AB-20166SLX	20x16x6	23	AB-2016TP	-	-	2	1
AB-20206SL	AB-20206SLX	20x20x6	28	AB-2020TP	-	-	2	1
AB-16208SL	AB-16208SLX	16x20x8	26	AB-1620TP	-	-	2	1
AB-20168SL	AB-20168SLX	20x16x8	26	AB-2016TP	-	-	2	1
AB-20208SL	AB-20208SLX	20x20x8	31	AB-2020TP	-	-	2	1
AB-20248SL	AB-20248SLX	20x24x8	36	AB-2420TP	-	-	2	2
AB-24168SL	AB-24168SLX	24x16x8	31	AB-2416TP	-	-	2	2
AB-24208SL	AB-24208SLX	24x20x8	36	AB-2420TP	-	-	2	2
AB-24248SL	AB-24248SLX	24x24x8	42	AB-2424TP	-	-	2	2
AB-24308SL	AB-24308SLX	24x30x8	50	AB-3024TP	-	-	2	2
AB-30208SL	AB-30208SLX	30x20x8	43	AB-3020TP	-	-	2	2
AB-30248SL	AB-30248SLX	30x24x8	50	AB-3024TP	-	-	2	2
AB-30308SL	AB-30308SLX	30x30x8	60	AB-3030TP	-	1	2	2
AB-36248SL	AB-36248SLX	36x24x8	58	AB-3624TP	-	-	3	2
AB-36308SL	AB-36308SLX	36x30x8	70	AB-3630TP	-	1	3	2
AB-202012SL	AB-202012SLX	20x20x12	38	AB-2020TP	-	-	2	1
AB-242412SL	AB-242412SLX	24x24x12	50	AB-2424TP	-	-	2	2
AB-302412SL	AB-302412SLX	30x24x12	59	AB-3024TP	-	-	2	2
AB-363012SL	AB-363012SLX	36x30x12	81	AB-3630TP	-	1	3	2
AB-363612SL	AB-363612SLX	36x36x12	94	AB-3636TP	1	1	3	2
AB-402412SL	AB-402412SLX	40x24x12	75	AB-4024TP	-	-	3	3 pt.
AB-423612SL	AB-423612SLX	42x36x12	106	AB-4236TP	1	1	3	3 pt.
AB-482412SL	AB-482412SLX	48x24x12	88	AB-4824TP	1	-	3	3 pt.
AB-483612SL	AB-483612SLX	48x36x12	118	AB-4836TP	1	1	3	3 pt.
AB-602412SL	AB-602412SLX	60x24x12	106	AB-6024TP	1	-	3	3 pt.
AB-603612SL	AB-603612SLX	60x36x12	144	AB-6036TP	1	1	3	3 pt.
AB-242416SL	AB-242416SLX	24x24x16	58	AB-2424TP	-	-	2	2
AB-363016SL	AB-363016SLX	36x30x16	93	AB-3630TP	-	1	3	2
AB-483616SL	AB-483616SLX	48x36x16	133	AB-4836TP	1	1	3	3 pt.

NEMA 4 SINGLE DOOR ENCLOSURES

Austin NEMA 4 single door enclosures are Underwriters Laboratories Listed and are designed for use primarily to provide a degree of protection against windblown dust and rain, splashing water, hose directed water and damage from external ice formation.

Construction:

- Fabricated in accordance with UL specifications from code gauge steel.
- All seams continuously welded and ground smooth.
- Rolled lip around three sides of door and all sides of door opening for watertight seal.
- Door removed by pulling stainless steel continuous hinge pin.
- Neoprene gasket attached to door with oil resistant adhesive.
- Clamps on three sides of door for watertight seal.
- Stainless steel external hardware.
- Hasp and staple provided for padlocking.
- External mounting feet.
- Standard plastic self-adhesive print pocket.
- Standard collar studs for mounting optional panel.

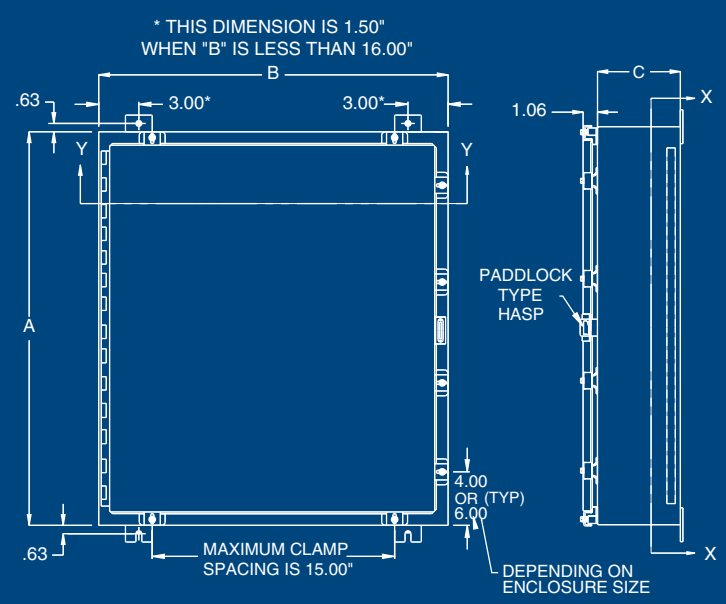

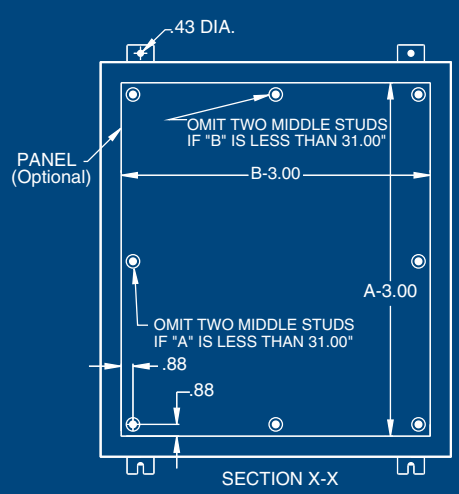

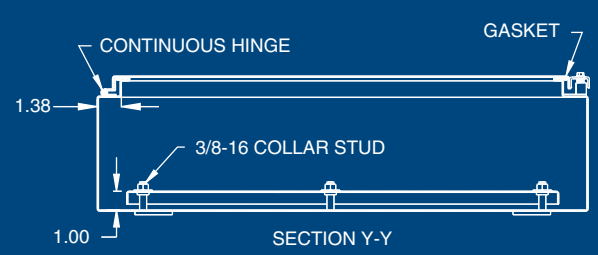

Finish:

Austin NEMA 4 single door enclosures are provided standard with an ANSI 61 gray polyester powder coating inside and out. Optional panels are painted white.

Options:

- Special materials.
- Special finishes.
- Custom box size or construction.

INDUSTRY STANDARDS

UL 50	Types 4 & 12
UL 508	Types 4 & 12
NEMA	Types 4 & 12
CUL	Types 4 & 12

Austin Electrical Enclosures
Post Office Box 2320
Yadkinville, NC 27055

Phone: 336.468.2851
800.288.2851

NEMA 4 SINGLE DOOR ENCLOSURES

Catalog Number	Enclosure Size (AxBxC)	Weight	Panel Catalog Number	Catalog Number	Enclosure Size (AxBxC)	Weight	Panel Catalog Number
AB-16126NF	16x12x6	23	AB-1612TP	AB-30308NF	30x30x8	78	AB-3030TP
AB-16166NF	16x16x6	28	AB-1616TP	AB-36248NF	36x24x8	74	AB-3624TP
AB-20166NF	20x16x6	32	AB-2016TP	AB-36308NF	36x30x8	92	AB-3630TP
AB-16206NF	16x20x6	32	AB-1620TP	AB-42308NF	42x30x8	106	AB-4230TP
AB-20206NF	20x20x6	38	AB-2020TP	AB-42368NF	42x36x8	125	AB-4236TP
AB-24126NF	24x12x6	31	AB-2412TP	AB-48368NF	48x36x8	139	AB-4836TP
AB-24166NF	24x16x6	37	AB-2416TP	AB-60368NF	60x36x8	167	AB-6036TP
AB-24206NF	24x20x6	43	AB-2420TP				
AB-24246NF	24x24x6	49	AB-2424TP				
AB-30206NF	30x20x6	53	AB-3020TP	AB-201610NF	20x16x10	39	AB-2016TP
AB-30246NF	30x24x6	60	AB-3024TP	AB-242010NF	24x20x10	52	AB-2420TP
AB-36246NF	36x24x6	69	AB-3624TP	AB-302410NF	30x24x10	70	AB-3024TP
				AB-363010NF	36x30x10	98	AB-3630TP
AB-16128NF	16x12x8	25	AB-1612TP	AB-483010NF	48x30x10	125	AB-4830TP
AB-20168NF	20x16x8	35	AB-2016TP	AB-483610NF	48x36x10	147	AB-4836TP
AB-20208NF	20x20x8	42	AB-2020TP	AB-603610NF	60x36x10	176	AB-6036TP
AB-24208NF	24x20x8	47	AB-2420TP				
AB-24248NF	24x24x8	54	AB-2424TP	AB-302412NF	30x24x12	75	AB-3024TP
AB-30208NF	30x20x8	57	AB-3020TP	AB-363012NF	36x30x12	104	AB-3630TP
AB-30248NF	30x24x8	65	AB-3024TP	AB-483612NF	48x36x12	154	AB-4836TP

NEMA 4 DOUBLE DOOR ENCLOSURES

Austin NEMA 4 double door enclosures are Underwriters Laboratories Listed and designed for use primarily to provide a degree of protection against windblown dust and rain, splashing water, hose directed water and damage from external ice formation.

Construction:

- Fabricated in accordance with UL specifications from code gauge steel.
- Rolled lip around three sides of door and along top of enclosure for watertight seal.
- All seams continuously welded and ground smooth.
- Removable centerpost with gasket.
- Neoprene gasket attached to doors with oil resistant adhesive.
- Clamps on three sides of door for watertight seal.
- Stainless steel external hardware.
- Hasp and staple provided for padlocking.
- Standard plastic self-adhesive print pocket.
- 12" floor stands welded on.
- Heavy duty lifting eyes.
- Standard collar studs for mounting optional panel.

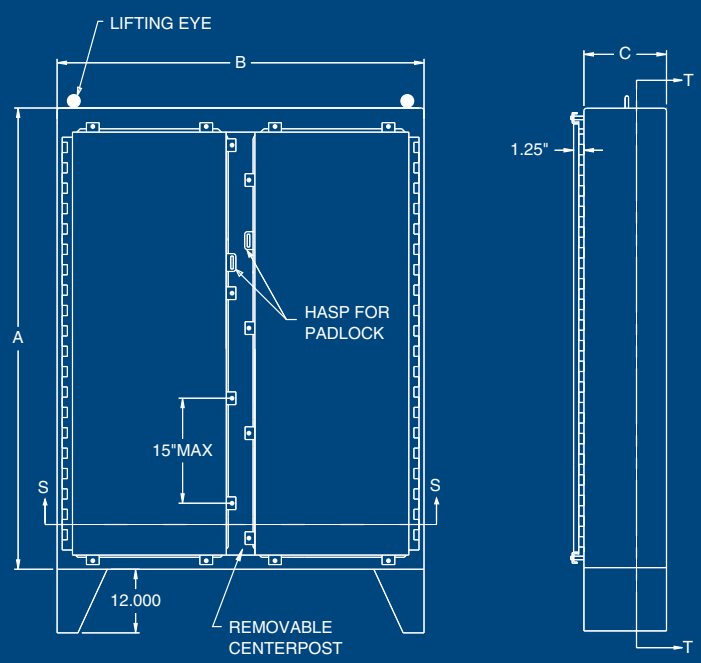

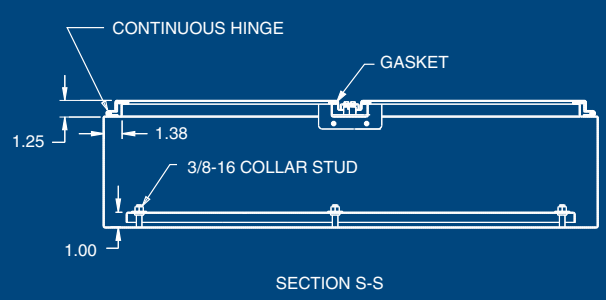

SECTION S-S

Finish:

Austin NEMA 4 double door enclosures are provided standard with an ANSI 61 gray polyester powder coating inside and out. Optional panels are painted white.

Options:

- Special materials.
- Special finishes.
- Custom box size or construction.

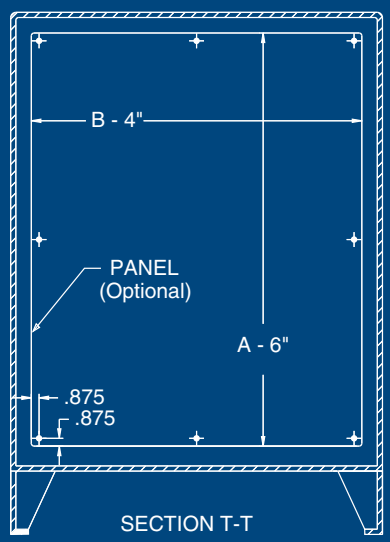

SECTION T-T

INDUSTRY STANDARDS

UL 50	Types 4 & 12
UL 508	Types 4 & 12
NEMA	Types 4 & 12
CUL	Types 4 & 12

Austin Electrical Enclosures
Post Office Box 2320
Yadkinville, NC 27055

Phone: 336.468.2851
800.288.2851

NEMA 4 DOUBLE DOOR ENCLOSURES

Catalog Number	Enclosure Size (AxBxC)	Weight	Panel Catalog Number
AB-624810NFD	62x48x10	357	AB-6048DP
AB-626010NFD	62x60x10	507	AB-6060DP
AB-746012NFD	74x60x12	560	AB-7260DP
AB-747212NFD	74x72x12	626	AB-7272DP

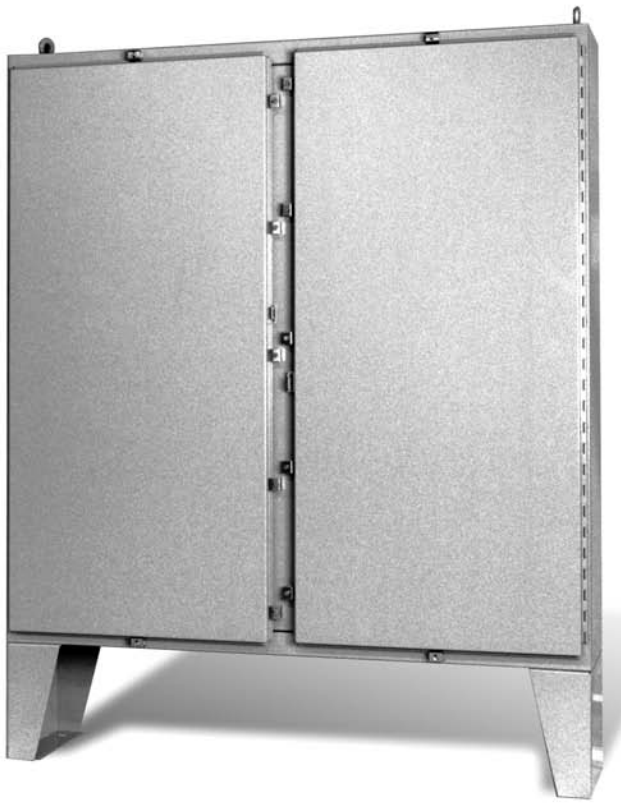

NEMA 4X STAINLESS STEEL ENCLOSURES

Austin NEMA 4X stainless steel single door enclosures are Underwriters Laboratories Listed and are designed for use primarily to provide a degree of protection against windblown dust and rain, splashing water, hose directed water and damage from external ice formation.

Construction:

- Fabricated in accordance with UL specifications from 14 or 12 gauge Type 304 stainless steel standard, Type 316 stainless steel optional.
- All seams continuously welded and ground smooth.
- Rolled lip around three sides of door and all sides of door opening for watertight seal.
- Neoprene gasket attached to door with oil resistant adhesive.
- Clamps on three sides of door for watertight seal.
- Stainless steel external hardware.
- Hasp and staple provided for padlocking.
- External mounting feet.
- Standard plastic self-adhesive print pocket.
- Standard collar studs for mounting optional panel.

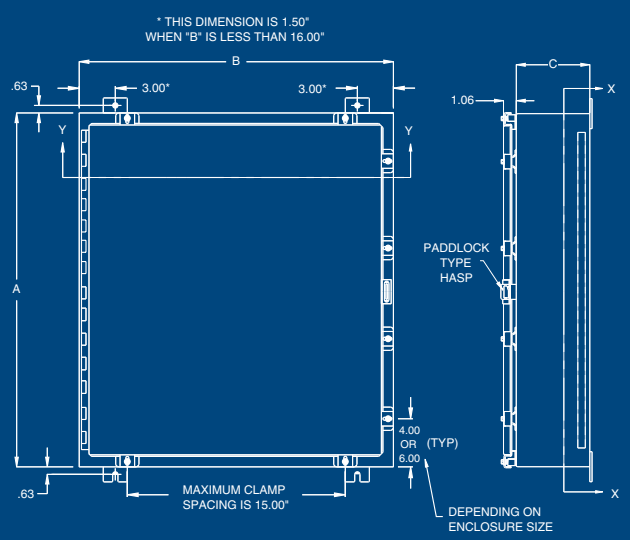

Finish:

Austin NEMA 4X stainless steel single door enclosures are provided standard in type 304 polished stainless steel. Optional panels are painted white, stainless steel panels are unpainted.

Options:

- Custom box size or construction.
- Type 316 stainless steel.

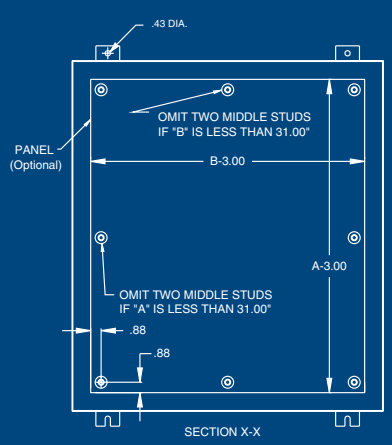

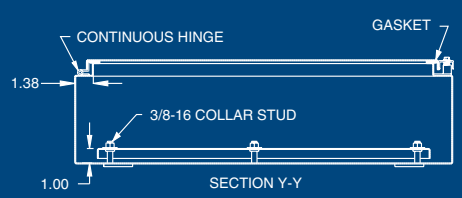

INDUSTRY STANDARDS

UL 50	Types 4X, 4 & 12
UL 508	Types 4X, 4 & 12
NEMA	Types 4X, 4 & 12
CUL	Types 4X, 4 & 12

Austin Electrical Enclosures
Post Office Box 2320
Yadkinville, NC 27055

Phone: 336.468.2851
800.288.2851

STAINLESS STEEL NEMA 4X ENCLOSURES

Catalog Number	Enclosure Size (AxBxC)	Enclosure Weight	Panel Catalog Number	Panel Weight	Catalog Number	Enclosure Size (AxBxC)	Enclosure Weight	Panel Catalog Number	Panel Weight
AB-16126NFX	16x12x6	16	AB-1612TP	4	AB-48368NFX	48x36x8	146	AB-4836TP	49
AB-16166NFX	16x16x6	20	AB-1616TP	6					
AB-20166NFX	20x16x6	23	AB-2016TP	7	AB-201610NFX	20x16x10	30	AB-2016TP	7
AB-20206NFX	20x20x6	28	AB-2020TP	9	AB-242010NFX	24x20x10	40	AB-2420TP	13
AB-24246NFX	24x24x6	38	AB-2424TP	15	AB-362410NFX	36x24x10	64	AB-3624TP	24
					AB-363010NFX	36x30x10	106	AB-3630TP	30
AB-24248NFX	24x24x8	42	AB-2424TP	15	AB-423010NFX	42x30x10	120	AB-4230TP	35
AB-24308NFX	24x30x8	50	AB-3024TP	19					
AB-30208NFX	30x20x8	43	AB-3020TP	16	AB-242412NFX	24x24x12	50	AB-2424TP	15
AB-30248NFX	30x24x8	50	AB-3024TP	19	AB-302412NFX	30x24x12	59	AB-3024TP	19
AB-36248NFX	36x24x8	58	AB-3624TP	24	AB-363012NFX	36x30x12	114	AB-3630TP	30
AB-36308NFX	36x30x8	98	AB-3630TP	30	AB-483612NFX	48x36x12	166	AB-4836TP	49
AB-42368NFX	42x36x8	130	AB-4236TP	43	AB-603612NFX	60x36x12	201	AB-6036TP	61

*Optional stainless steel panels are available

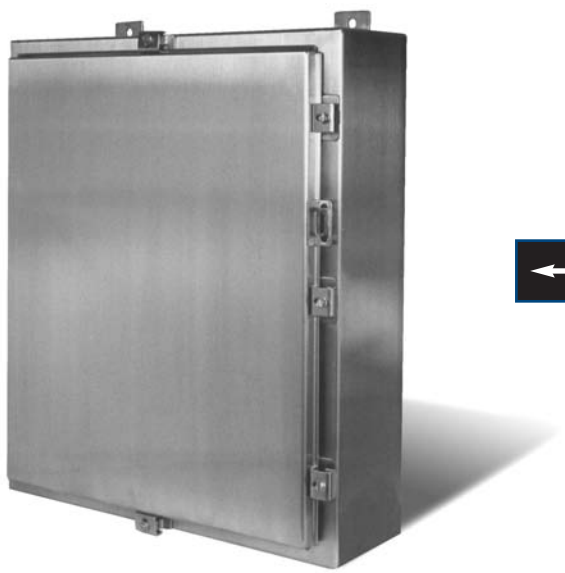

NEMA 4X ALUMINUM ENCLOSURES

Type 4 & 12 Enclosures

Austin NEMA 4X aluminum enclosures are Underwriters Laboratories Listed and are designed for use primarily to provide a degree of protection against windblown dust and rain, splashing water, hose directed water and damage from external ice formation.

Construction:

- Fabricated in accordance with UL specifications form Type 5052-H32 aluminum.
- All seams continuously welded and ground smooth.
- Rolled lip around three sides of door and all sides of door opening for watertight seal.
- Neoprene gasket attached to door with oil resistant adhesive.
- Clamps on three sides of door for watertight seal.
- Aluminum continuous hinge.
- Stainless steel external hardware.
- Hasp and staple provided for padlocking.
- External mounting feet
- Standard plastic self-adhesive print pocket.
- Standard collar studs for mounting optional panel.

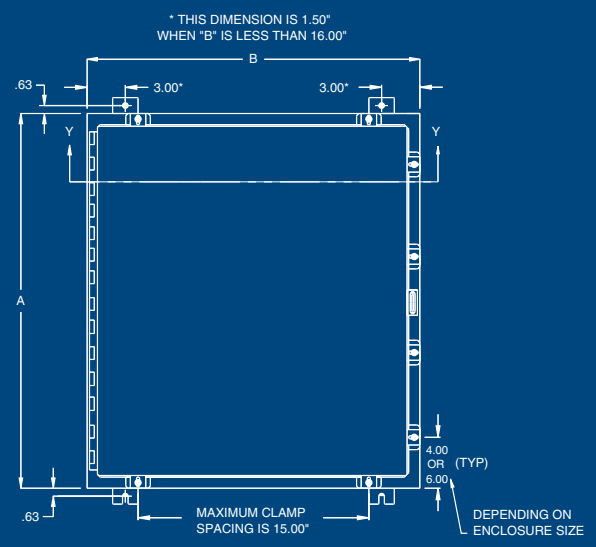

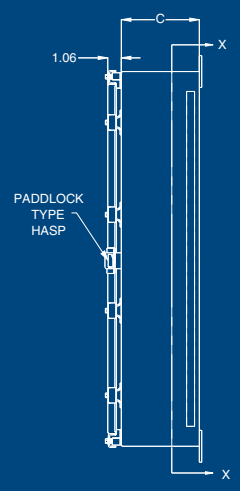

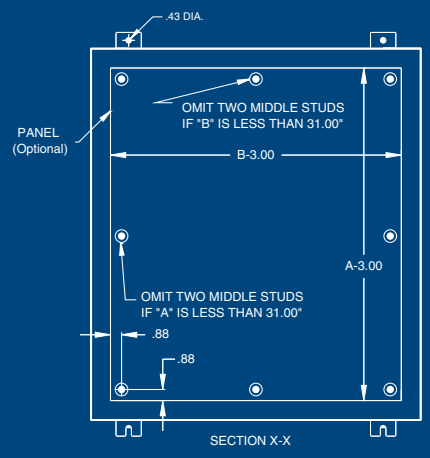

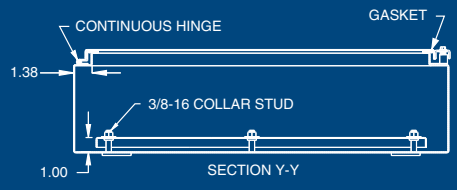

Finish:

Austin NEMA 4X aluminum enclosures are provided standard in Type 5052-H32 aluminum. Optional panels are painted white. Aluminum panels are unpainted.

Options:

- Custom box size or construction.

INDUSTRY STANDARDS

UL 50	Types 4X, 4 & 12
UL 508	Types 4X, 4 & 12
NEMA	Types 4X, 4 & 12
CUL	Types 4X, 4 & 12

Austin Electrical Enclosures
Post Office Box 2320
Yadkinville, NC 27055

Phone: 336.468.2851
800.288.2851

ALUMINUM NEMA 4X ENCLOSURES

Catalog Number	Enclosure Size (AxBxC)	Weight	Steel Panel Catalog Number
AB-16126NFA	16x12x6	6	AB-1612TP
AB-20166NFA	20x16x6	8	AB-2016TP
AB-20206NFA	20x20x6	10	AB-2020TP
AB-24206NFA	24x20x6	12	AB-2420TP
AB-24248NFA	24x24x8	17	AB-2424TP
AB-30248NFA	30x24x8	20	AB-3024TP
AB-36248NFA	36x24x8	24	AB-3624TP
AB-36308NFA	36x30x8	32	AB-3630TP
AB-48368NFA	48x36x8	47	AB-4836TP
AB-201610NFA	20x16x10	11	AB-2016TP
AB-242010NFA	24x20x10	14	AB-2420TP
AB-302412NFA	30x24x12	24	AB-3024TP
AB-363012NFA	36x30x12	37	AB-3630TP
AB-603612NFA	60x36x12	65	AB-6036TP

*Optional aluminum panels are available

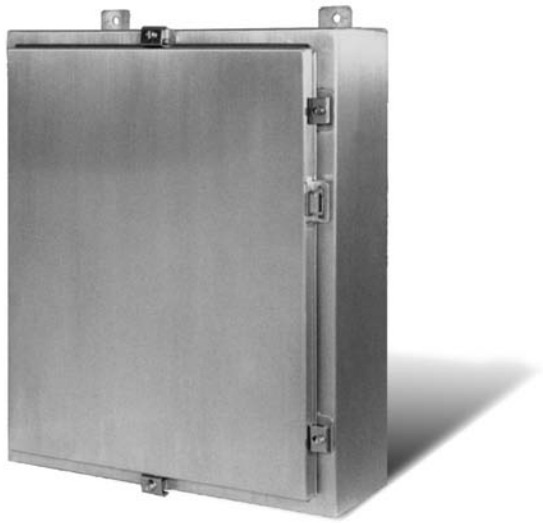

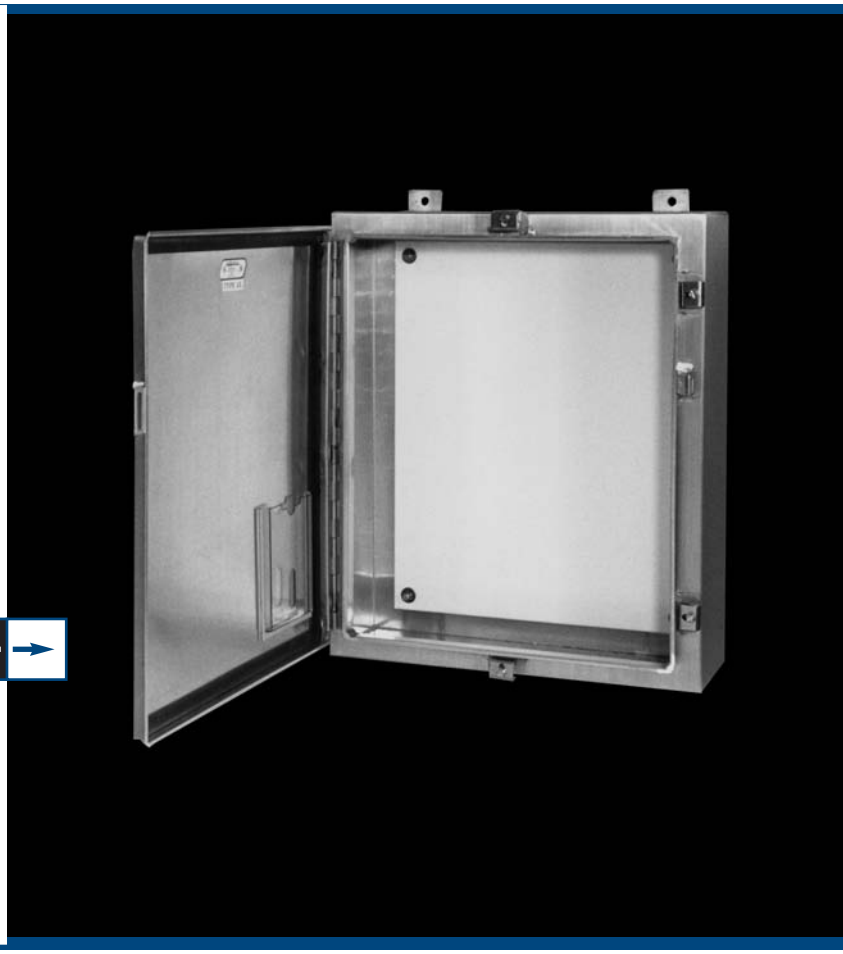

NEMA 12 SINGLE DOOR ENCLOSURES

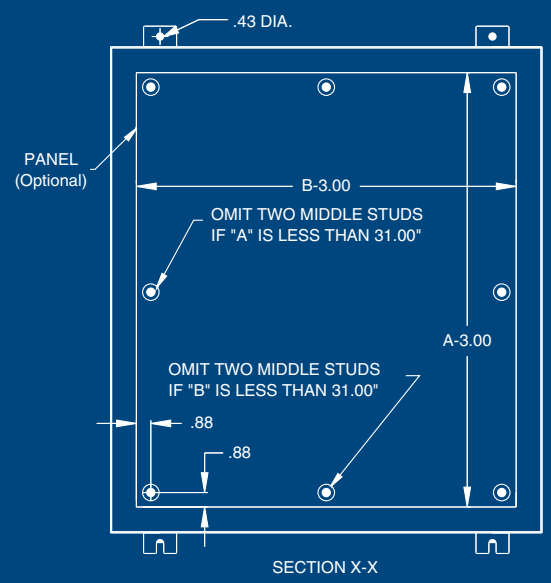

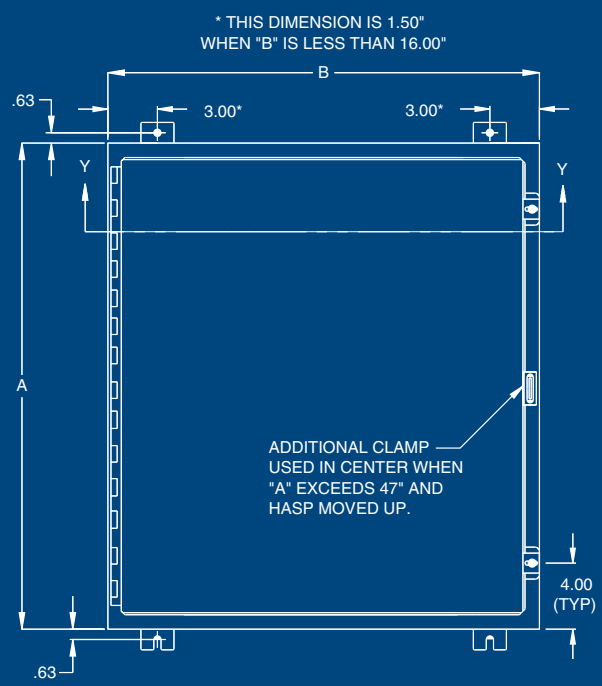

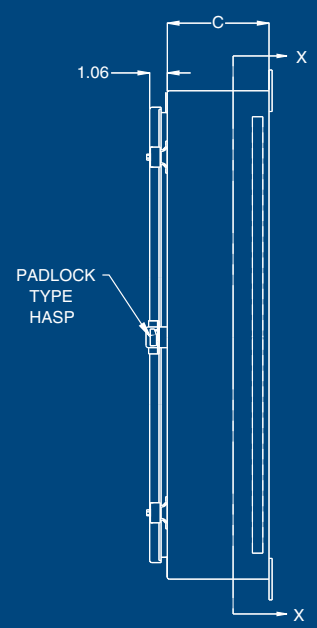

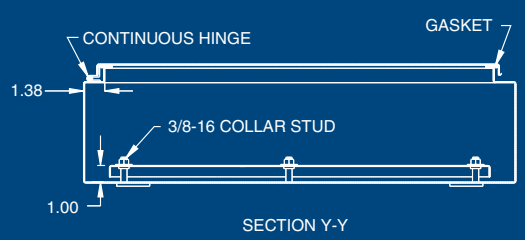

INDUSTRY STANDARDS

UL 50	Type 12
UL 508	Type 12
NEMA	Type 12
CUL	Type 12

Austin Electrical Enclosures
Post Office Box 2320
Yadkinville, NC 27055

Phone: 336.468.2851
800.288.2851

NEMA 12 SINGLE DOOR ENCLOSURES

Austin NEMA 12 single door enclosures are Underwriters Laboratories Listed and are designed for indoor use primarily to provide a degree of protection against circulating dust, falling dirt, and dripping noncorrosive liquids.

Construction:

- Fabricated in accordance with UL specifications from code gauge steel.
- Continuously welded seams ground smooth.
- Door removed by pulling continuous hinge pin.
- Neoprene gasket attached to door with oil resistant adhesive.
- Hasp and staple provided for padlocking.
- External feet for mounting enclosure.
- Standard plastic self-adhesive print pocket.
- Standard collar studs for mounting optional panel.

Finish:

Austin Type 12 Single door enclosures are provided standard with an ANSI 61 gray polyester powder coating inside and out. Optional panels are finished white.

Options:

- Special materials.
- Special finishes.
- Custom box size or construction.

NEMA 12 SINGLE DOOR ENCLOSURES

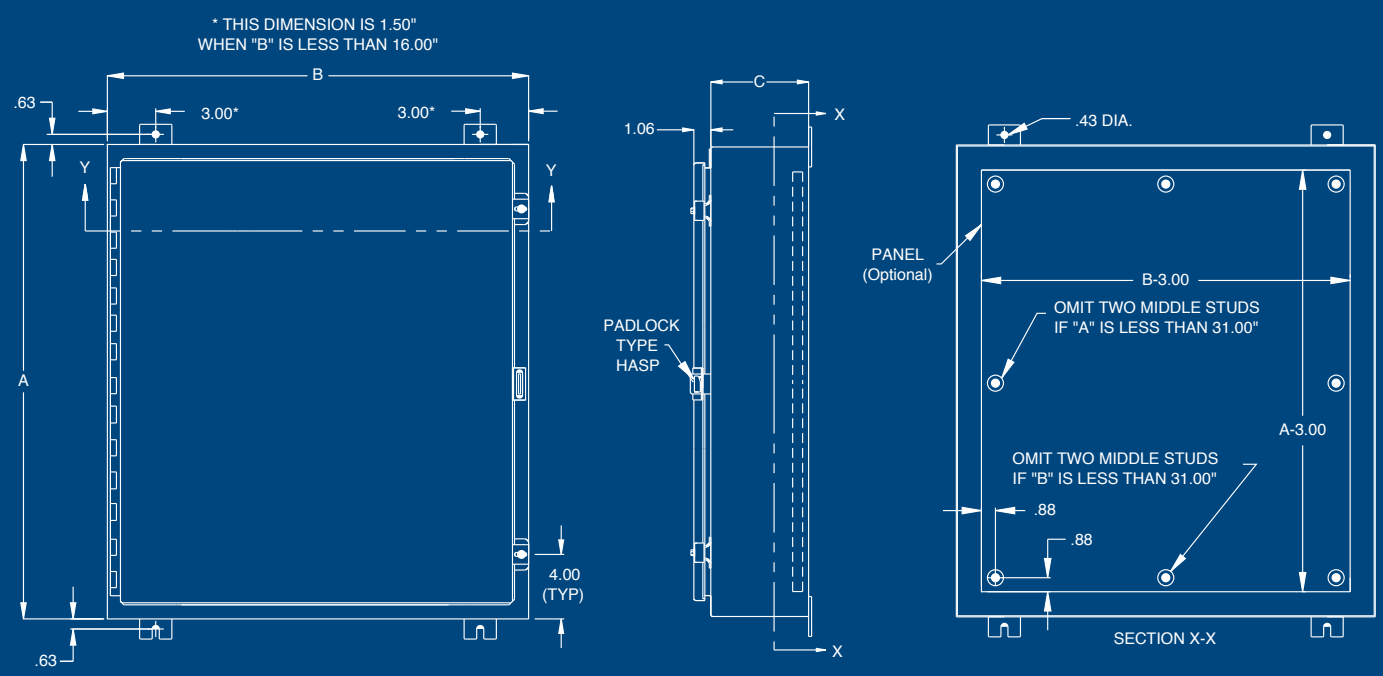

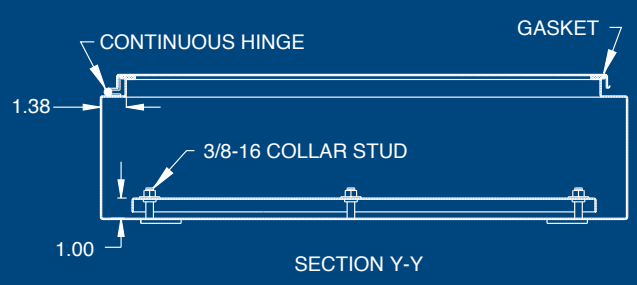

INDUSTRY STANDARDS

UL 50	Type 12
UL 508	Type 12
NEMA	Type 12
CUL	Type 12

Austin Electrical Enclosures
Post Office Box 2320
Yadkinville, NC 27055

Phone: 336.468.2851
800.288.2851

NEMA 12 SINGLE DOOR ENCLOSURES

Catalog Number	Enclosure Size (AxBxC)	Enclosure Weight	Panel Catalog Number	Panel Weight	Catalog Number	Enclosure Size (AxBxC)	Enclosure Weight	Panel Catalog Number	Panel Weight
AB-12246N	12x24x6	29	AB-1224TP	8	AB-202010N	20x20x10	44	AB-2020TP	9
AB-16126N	16x12x6	22	AB-1612TP	4	AB-241210N	24x12x10	36	AB-2412TP	7
AB-16166N	16x16x6	27	AB-1616TP	6	AB-242010N	24x20x10	50	AB-2420TP	13
AB-20126N	20x12x6	26	AB-2012TP	5	AB-242410N	24x24x10	56	AB-2424TP	15
AB-20166N	20x16x6	31	AB-2016TP	7	AB-302010N	30x20x10	60	AB-3020TP	16
AB-16206N	16x20x6	31	AB-1620TP	7	AB-302410N	30x24x10	68	AB-3024TP	19
AB-20206N	20x20x6	36	AB-2020TP	9	AB-362410N	36x24x10	78	AB-3624TP	24
AB-24126N	24x12x6	30	AB-2412TP	7	AB-363010N	36x30x10	96	AB-3630TP	30
AB-24166N	24x16x6	37	AB-2416TP	9	AB-423010N	42x30x10	108	AB-4230TP	35
AB-20246N	20x24x6	42	AB-2024TP	13	AB-423610N	42x36x10	126	AB-4236TP	43
AB-24206N	24x20x6	41	AB-2420TP	13	AB-483010N	48x30x10	120	AB-4830TP	40
AB-24246N	24x24x6	48	AB-2424TP	15	AB-483610N	48x36x10	141	AB-4836TP	49
AB-30166N	30x16x6	41	AB-3016TP	12	AB-603610N	60x36x10	169	AB-6036TP	61
AB-30206N	30x20x6	51	AB-3020TP	16					
AB-30246N	30x24x6	58	AB-3024TP	19	AB-201612N	20x16x12	41	AB-2016TP	7
AB-36246N	36x24x6	69	AB-3624TP	24	AB-242012N	24x20x12	54	AB-2420TP	13
AB-36306N	36x30x6	84	AB-3630TP	30	AB-242412N	24x24x12	61	AB-2424TP	15
					AB-302412N	30x24x12	73	AB-3024TP	19
AB-16128N	16x12x8	24	AB-1612TP	4	AB-303012N	30x30x12	89	AB-3030TP	24
AB-16168N	16x16x8	31	AB-1616TP	6	AB-362412N	36x24x12	83	AB-3624TP	24
AB-20128N	20x12x8	28	AB-2012TP	5	AB-363012N	36x30x12	102	AB-3630TP	30
AB-20168N	20x16x8	34	AB-2016TP	7	AB-363612N	36x36x12	117	AB-3636TP	37
AB-16208N	16x20x8	34	AB-1620TP	7	AB-423012N	42x30x12	115	AB-4230TP	35
AB-20208N	20x20x8	40	AB-2020TP	9	AB-423612N	42x36x12	132	AB-4236TP	43
AB-24128N	24x12x8	33	AB-2412TP	7	AB-483612N	48x36x12	148	AB-4836TP	49
AB-12248N	12x24x8	33	AB-1224TP	7	AB-603612N	60x36x12	178	AB-6036TP	61
AB-24168N	24x16x8	40	AB-2416TP	15	AB-723012N	72x30x12	177	AB-7230TP	62
AB-24208N	24x20x8	46	AB-2420TP	13					
AB-20248N	20x24x8	46	AB-2024TP	13					
AB-24248N	24x24x8	52	AB-2424TP	15	AB-242016N	24x20x16	62	AB-2420TP	13
AB-30208N	30x20x8	55	AB-3020TP	16	AB-242416N	24x24x16	70	AB-2424TP	15
AB-30248N	30x24x8	63	AB-3024TP	19	AB-302416N	30x24x16	82	AB-3024TP	19
AB-24308N	24x30x8	62	AB-2430TP	19	AB-363016N	36x30x16	114	AB-3630TP	30
AB-30308N	30x30x8	75	AB-3030TP	30	AB-423616N	42x36x16	147	AB-4236TP	43
AB-36248N	36x24x8	72	AB-3624TP	24	AB-483616N	48x36x16	164	AB-4836TP	49
AB-36308N	36x30x8	90	AB-3630TP	30	AB-603616N	60x36x16	195	AB-6036TP	61
AB-30368N	30x36x8	89	AB-3036TP	30	AB-723016N	72x30x16	196	AB-7230TP	62
AB-36368N	36x36x8	102	AB-3636TP	37					
AB-42248N	42x24x8	82	AB-4224TP	28	AB-722418N	72x24x18	157	AB-7224TP	49
AB-42308N	42x30x8	101	AB-4230TP	35					
AB-42368N	42x36x8	119	AB-4236TP	43	AB-302420N	30x24x20	92	AB-3024TP	19
AB-48248N	48x24x8	92	AB-4824TP	32	AB-363020N	36x30x20	125	AB-3630TP	30
AB-48308N	48x30x8	113	AB-4830TP	40	AB-483620N	48x36x20	178	AB-4836TP	49
AB-48368N	48x36x8	133	AB-4836TP	49	AB-603620N	60x36x20	211	AB-6036TP	61
AB-60368N	60x36x8	160	AB-6036TP	61	AB-723020N	72x30x20	215	AB-7230TP	62
AB-161210N	16x12x10	27	AB-1612TP	4	AB-722424N	72x24x24	184	AB-7224TP	49
AB-201610N	20x16x10	38	AB-2016TP	7	AB-723024N	72x30x24	234	AB-7230TP	62

NEMA 12 DOUBLE DOOR ENCLOSURES

Austin NEMA 12 double door enclosures are Underwriters Laboratories Listed and are designed to house electrical controls, terminals, and instruments. They provide a degree of protection against circulating dust, falling dirt, and dripping noncorrosive liquids.

Construction:

- Fabricated in accordance with UL specifications from code gauge steel.
- Continuously welded seams ground smooth.
- Overlapping doors eliminate need for centerpost.
- An AB-6 three point lever handle with roller arms holds doors securely.
- 12" legs are welded to enclosure.
- Heavy duty lifting eyes.
- Heavy gauge continuous hinge.
- Neoprene gasket attached to doors with oil resistant adhesive.
- Standard plastic self-adhesive print pocket.
- Standard collar studs provided for mounting optional panel.

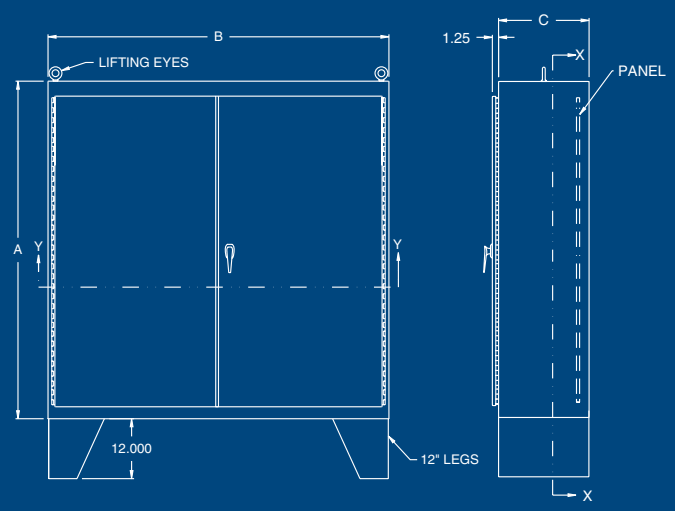

Finish:

Austin double door NEMA 12 enclosures are provided standard with an ANSI 61 gray polyester powder coating. Optional panels are painted white.

Options:

- Special materials.
- Special finishes.
- Custom box size or construction.

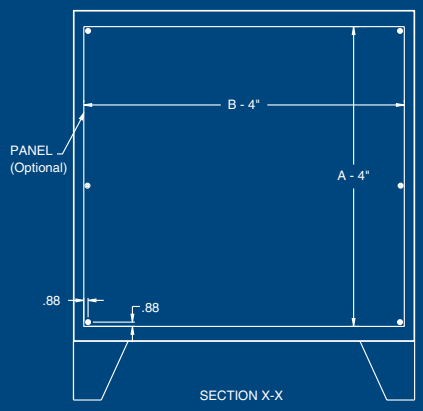

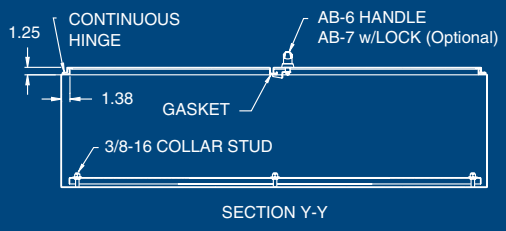

INDUSTRY STANDARDS		
	UL 50	Type 12
	UL 508	Type 12
	NEMA	Type 12
	CUL	Type 12

Austin Electrical Enclosures
Post Office Box 2320
Yadkinville, NC 27055

Phone: 336.468.2851
800.288.2851

NEMA 12 DOUBLE DOOR ENCLOSURES

Catalog Number	Enclosure Size (AxBxC)	Weight	Panel Catalog Number	Catalog Number	Enclosure Size (AxBxC)	Weight	Panel Catalog Number
AB-54428ND	54x42x8	210	AB-5442DP	AB-604816ND	60x48x16	420	AB-6048DP
AB-60488ND	60x48x8	319	AB-6048DP	AB-606016ND	60x60x16	520	AB-6060DP
				AB-726016ND	72x60x16	582	AB-7260DP
AB-604810ND	60x48x10	330	AB-6048DP	AB-727216ND	72x72x16	630	AB-7272DP
AB-606010ND	60x60x10	390	AB-6060DP				
AB-726010ND	72x60x10	450	AB-7260DP	AB-604820ND	60x48x20	486	AB-6048DP
AB-727210ND	72x72x10	525	AB-7272DP	AB-726020ND	72x60x20	577	AB-7260DP
				AB-727220ND	72x72x20	650	AB-7272DP
AB-604812ND	60x48x12	360	AB-6048DP	AB-604824ND	60x48x24	500	AB-6048DP
AB-606012ND	60x60x12	400	AB-6060DP	AB-606024ND	60x60x24	566	AB-6060DP
AB-726012ND	72x60x12	475	AB-7260DP	AB-726024ND	72x60x24	614	AB-7260DP
AB-727212ND	72x72x12	560	AB-7272DP	AB-727224ND	72x72x24	690	AB-7272DP

NEMA 12 FLUSH MOUNT ENCLOSURES

Austin flush NEMA 12 enclosures are Underwriters Laboratories Listed and are designed to house electrical controls, terminals, and instruments. They provide a degree of protection against circulating dust, falling dirt, and noncorrosive liquids.

Construction:

- Fabricated in accordance with UL specifications from code gauge steel.
- Continuously welded seams ground smooth.
- Neoprene gasket attached to door with oil resistant adhesive.
- Continuous hinge on one side and screws on opposite side to hold door in place.
- 10 gauge trim around enclosure.
- Standard plastic self-adhesive print pocket.
- Standard collar studs for mounting optional panel.

Finish:

Austin flush NEMA 12 enclosures are provided standard with an ANSI 61 gray polyester powder coating. Optional panels are painted white.

Options:

- Special materials.
- Special finishes.
- Custom box size or construction.

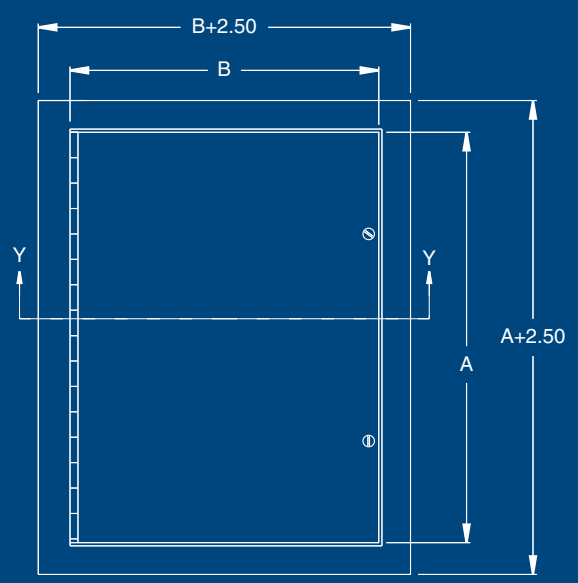

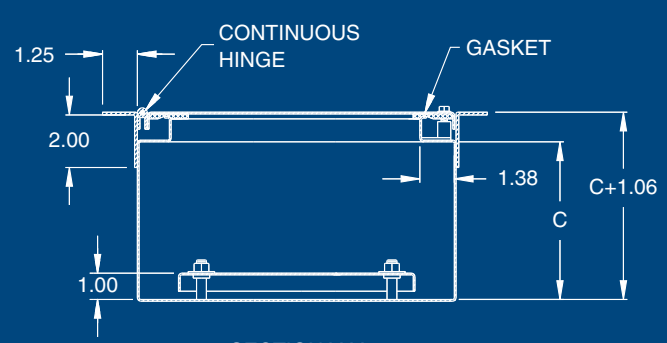

SECTION Y-Y

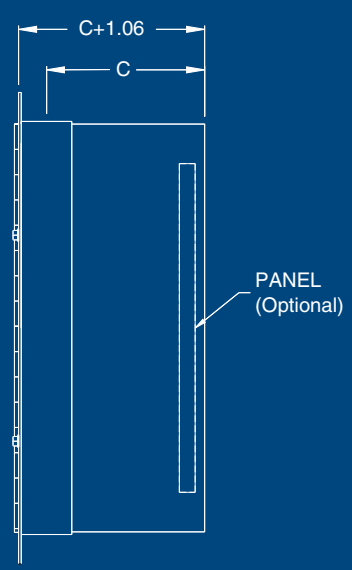

INDUSTRY STANDARDS

UL 50	Type 12
UL 508	Type 12
NEMA	Type 12
CUL	Type 12

Austin Electrical Enclosures
Post Office Box 2320
Yadkinville, NC 27055

Phone: 336.468.2851
800.288.2851

NEMA 12 FLUSH ENCLOSURES

Catalog Number	Enclosure Size (AxBxC)	Weight	Panel Catalog Number
AB-16126FN	16x12x6	27	AB-1612TP
AB-20166FN	20x16x6	38	AB-2016TP
AB-20206FN	20x20x6	44	AB-2020TP
AB-24206FN	24x20x6	50	AB-2420TP
AB-24248FN	24x24x8	61	AB-2424TP
AB-30248FN	30x24x8	73	AB-3024TP
AB-36248FN	36x24x8	83	AB-3624TP
AB-36308FN	36x30x8	104	AB-3630TP

NEMA 12 ALUMINUM ENCLOSURES

Austin NEMA 12 aluminum enclosures are Underwriters Laboratories Listed and are designed to house electrical controls, terminals, and instruments. They provide a degree of protection against circulating dust, falling dirt, and noncorrosive liquids.

Construction:

- Fabricated in accordance with UL specifications from 5052-H32 aluminum.
- Continuously welded seams ground smooth.
- Aluminum continuous hinge.
- Neoprene gasket attached to door with oil resistant adhesive.
- Hasp and staple provided for padlocking.
- External feet for mounting enclosure.
- Standard plastic self-adhesive print pocket.
- Standard collar studs for mounting optional panel.

Finish:

Austin NEMA 12 aluminum enclosures are provided standard in 5052-H32 aluminum. Optional steel panels are painted white. Aluminum panels are unpainted.

Options:

- Custom box size or construction.

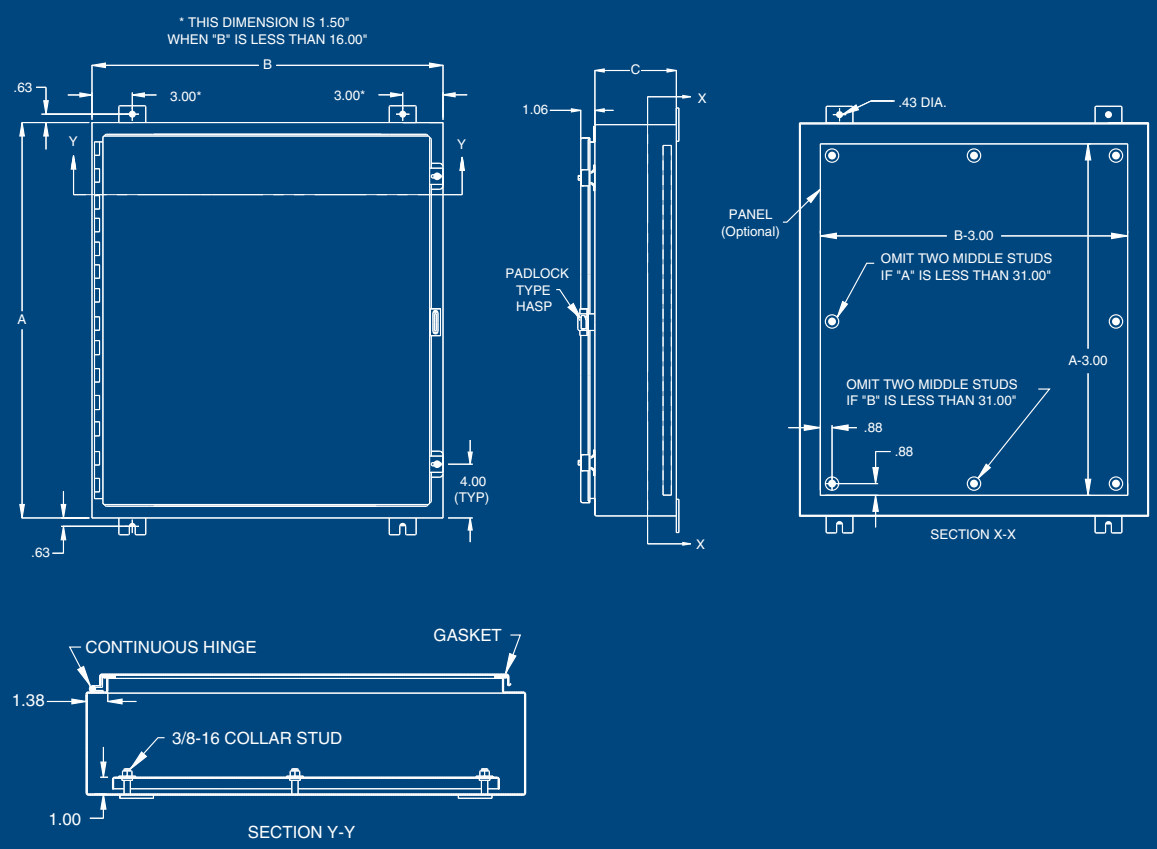

INDUSTRY STANDARDS	
UL 50	Type 12
UL 508	Type 12
NEMA	Type 12
CUL	Type 12

Austin Electrical Enclosures
Post Office Box 2320
Yadkinville, NC 27055

Phone: 336.468.2851
800.288.2851

NEMA 12 ALUMINUM ENCLOSURES

Catalog Number	Enclosure Size (AxBxC)	Weight	Steel Panel Catalog Number
AB-16126NA	16x12x6	6	AB-1612TP
AB-20166NA	20x16x6	9	AB-2016TP
AB-20206NA	20x20x6	10	AB-2020TP
AB-24206NA	24x20x6	12	AB-2420TP
AB-24248NA	24x24x8	17	AB-2424TP
AB-30248NA	30x24x8	20	AB-3024TP
AB-36248NA	36x24x8	24	AB-3624TP
AB-36308NA	36x30x8	31	AB-3630TP
AB-48368NA	48x36x8	47	AB-4836TP
AB-201610NA	20x16x10	11	AB-2016TP
AB-242010NA	24x20x10	14	AB-2420TP
AB-302412NA	30x24x12	24	AB-3024TP
AB-363012NA	36x30x12	37	AB-3630TP
AB-603612NA	60x36x12	65	AB-6036TP

*Optional aluminum panels are available

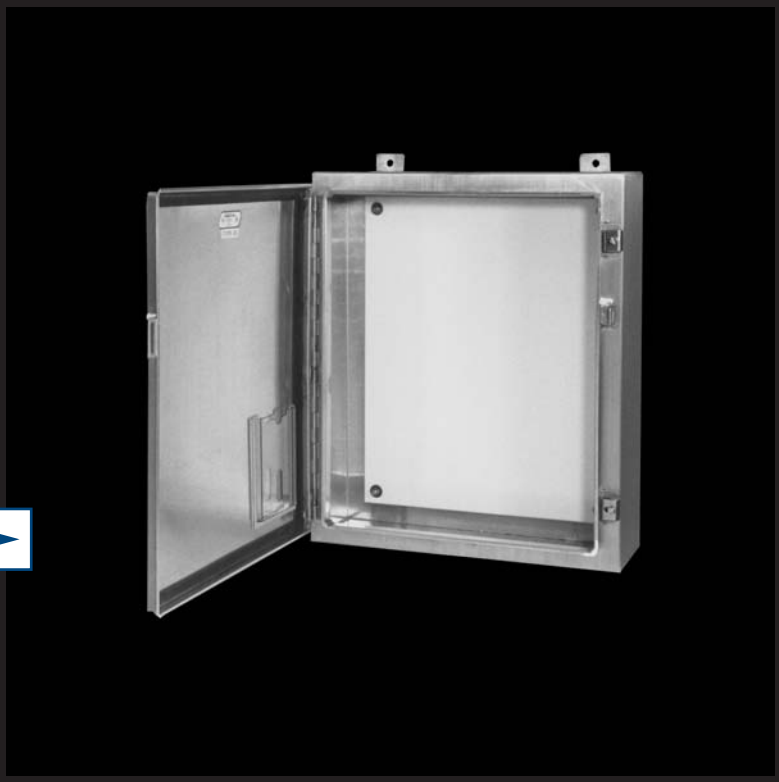

NEMA 12 SINGLE DOOR FREESTANDING ENCLOSURES

Austin freestanding single door NEMA 12 enclosures are Underwriters Laboratories Listed and are designed to house electrical controls, terminals, and instruments. They provide a degree of protection against circulating dust, falling dirt, and dripping noncorrosive liquids.

Construction:

- Fabricated in accordance with UL specifications from code gauge steel.
- Continuously welded seams ground smooth.
- Neoprene gasket attached to door with oil resistant adhesive.
- An AB-6 three point lever handle with roller arms holds door securely.
- Heavy gauge continuous hinge.
- Heavy duty lifting eyes.
- Standard plastic self-adhesive print pocket.
- Mounting channels welded horizontally to enclosure interior sides at top, bottom, and center for optional panel.

Finish:

Austin freestanding single door NEMA 12 enclosures are provided standard with an ANSI 61 gray polyester powder coating. Optional panels are painted white.

Options:

- Special materials.
- Special finishes.
- Custom box size or construction.

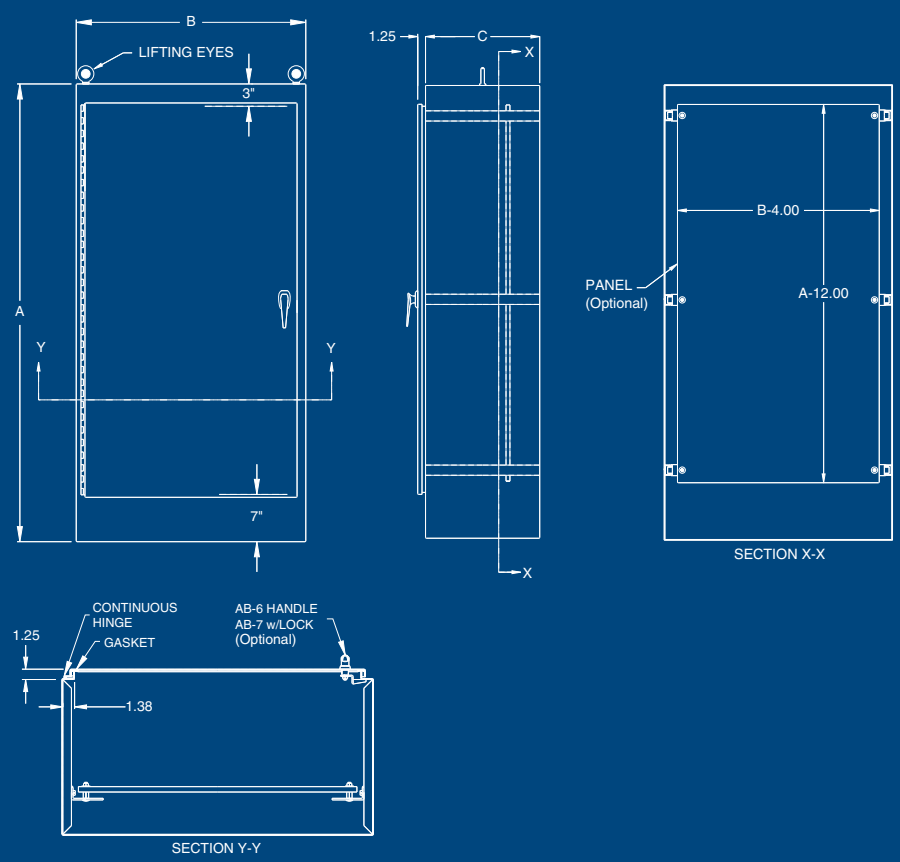

INDUSTRY STANDARDS		
	UL 50	Type 12
	UL 508	Type 12
	NEMA	Type 12
	CUL	Type 12

Austin Electrical Enclosures
Post Office Box 2320
Yadkinville, NC 27055

Phone: 336.468.2851
800.288.2851

NEMA 12 SINGLE DOOR FREESTANDING ENCLOSURES

Catalog Number	Enclosure Size (AxBxC)	Weight	Panel Catalog Number	Weight
AB-722418FSN	72x24x18	246	AB-7224FTP	65
AB-723018FSN	72x30x18	285	AB-7230FTP	74
AB-723618FSN	72x36x18	325	AB-7236FTP	98
AB-903620FSN	90x36x20	406	AB-9036FTP	108
AB-722424FSN	72x24x24	300	AB-7224FTP	65
AB-723024FSN	72x30x24	335	AB-7230FTP	74
AB-723624FSN	72x36x24	370	AB-7236FTP	98
AB-903624FSN	90x36x24	440	AB-9036FTP	108
AB-722430FSN	72x24x30	355	AB-7224FTP	65
AB-723630FSN	72x36x30	420	AB-7236FTP	74
AB-722436FSN	72x24x36	400	AB-7224FTP	65
AB-723636FSN	72x36x36	465	AB-7236FTP	74
AB-903636FSN	90x36x36	525	AB-9036FTP	108

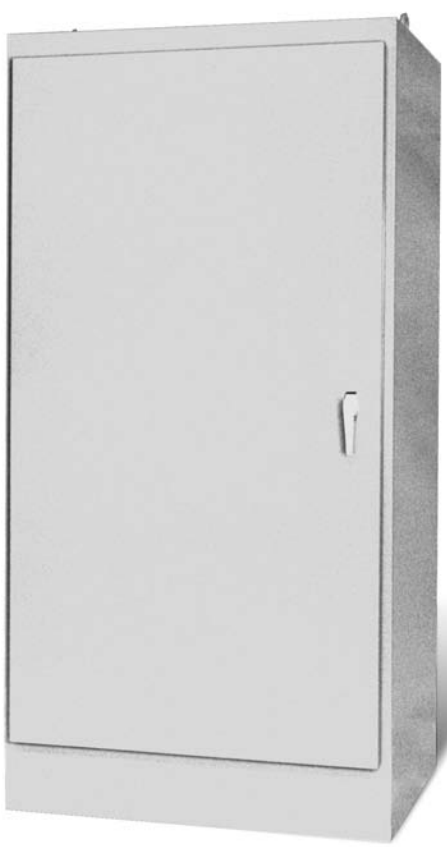

NEMA 12 DOUBLE DOOR FREESTANDING ENCLOSURES

Austin freestanding double door NEMA 12 enclosures are Underwriters Laboratories Listed and are designed to house electrical controls, terminals, and instruments. They provide a degree of protection against circulating dust, falling dirt, and dripping noncorrosive liquids.

Construction:

- Fabricated in accordance with UL specifications from code gauge steel.
- Continuously welded seams ground smooth.
- Overlapping doors eliminate need for centerpost.
- Neoprene gasket attached to door with oil resistant adhesive.
- An AB-6 three point lever handle with roller arms holds doors securely.
- Heavy gauge continuous hinge.
- Heavy duty lifting eyes.
- Standard plastic self-adhesive print pocket.
- Mounting channels welded horizontally to enclosure interior sides at top, bottom, and center for optional panel.

Finish:

Austin freestanding double door NEMA 12 enclosures are provided standard with an ANSI 61 gray polyester powder coating. Optional panels are painted white.

Options:

- Special materials.
- Special finishes.
- Custom box size or construction.

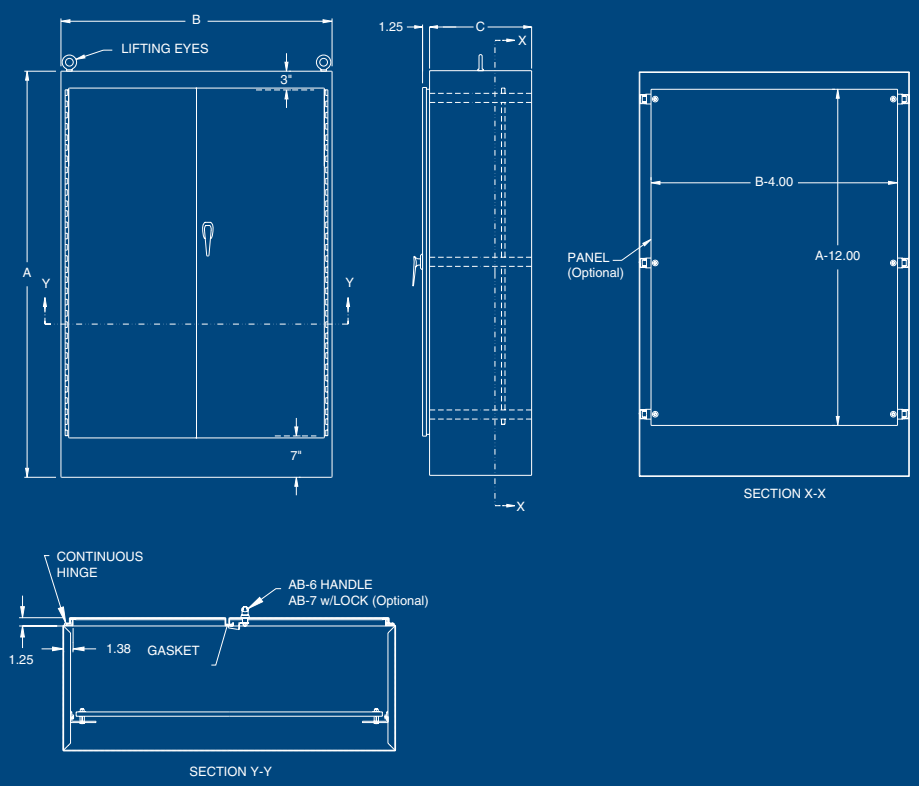

INDUSTRY STANDARDS		
	UL 50	Type 12
	UL 508	Type 12
	NEMA	Type 12
	CUL	Type 12

Austin Electrical Enclosures
Post Office Box 2320
Yadkinville, NC 27055

Phone: 336.468.2851
800.288.2851

NEMA 12 DOUBLE DOOR FREESTANDING ENCLOSURES

Catalog Number	Enclosure Size (AxBxC)	Weight	Panel Catalog Number	Weight
AB-724818FSND	72x48x18	500	AB-7248FTP	131
AB-726018FSND	72x60x18	568	AB-7260FTP	159
AB-727218FSND	72x72x18	645	AB-7272FTP	187
AB-907220FSND	90x72x20	781	AB-9072FTP	238
AB-724824FSND	72x48x24	560	AB-7248FTP	131
AB-726024FSND	72x60x24	645	AB-7260FTP	159
AB-727224FSND	72x72x24	695	AB-7272FTP	187
AB-907224FSND	90x72x24	825	AB-9072FTP	238
AB-726036FSND	72x60x36	750	AB-7260FTP	159
AB-907236FSND	90x72x36	1000	AB-9072FTP	238

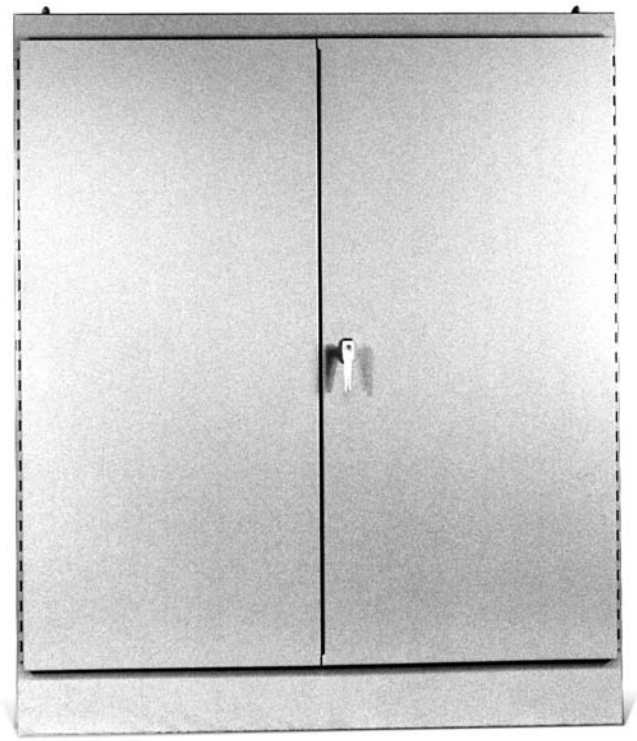

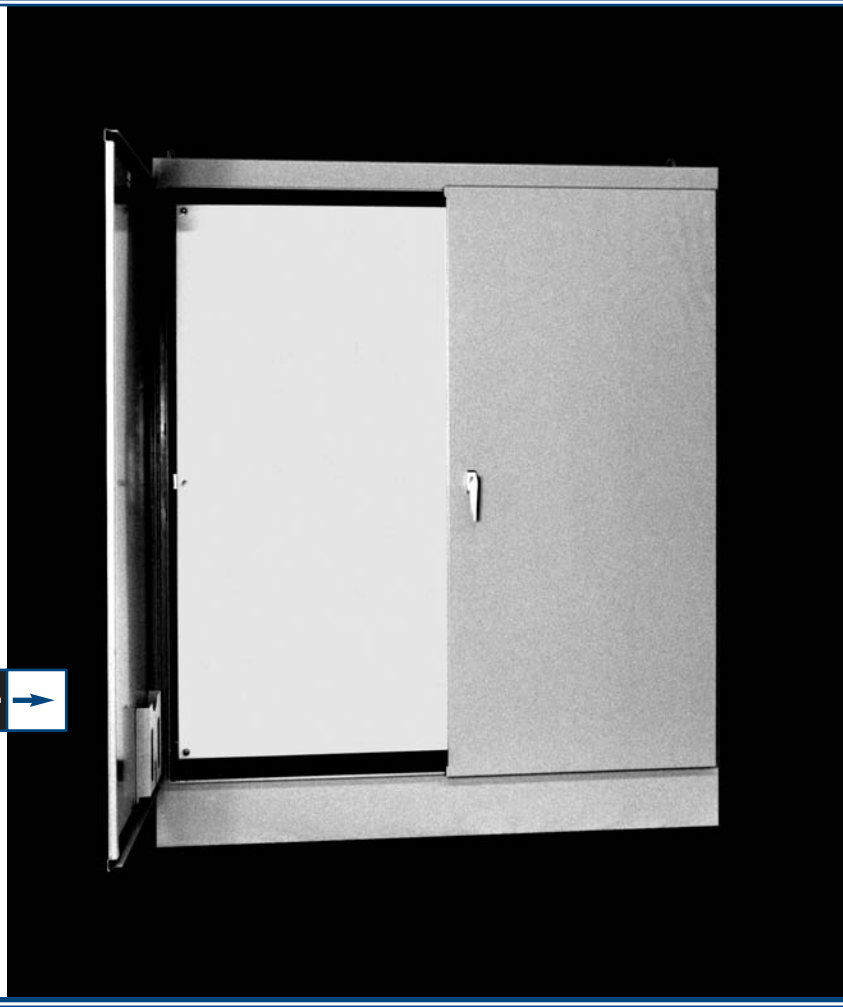

NEMA 12 DOUBLE DOOR WALL MOUNT ENCLOSURES

Austin double door NEMA 12 wall mount enclosures are Underwriters Laboratories Listed and are designed to house electrical controls, instruments, and components. They provide a degree of protection against circulating dust, falling dirt, and noncorrosive liquids.

Construction:

- Fabricated in accordance with UL specifications from code gauge steel.
- Continuously welded seams ground smooth.
- An AB-6 three point lever handle with roller arms holds doors securely.
- Neoprene gasket attached to door with oil resistant adhesive.
- Overlapping doors eliminate need for centerpost.
- Heavy gauge continuous hinge.
- Standard plastic self-adhesive print pocket.
- External mounting feet.
- Standard collar studs for mounting optional panel.

Finish:

Austin double door NEMA 12 wall mount enclosures are provided standard with an ANSI 61 gray polyester powder coating. Optional panels are painted white.

Options:

- Special materials.
- Special finishes.
- Custom box size or construction.

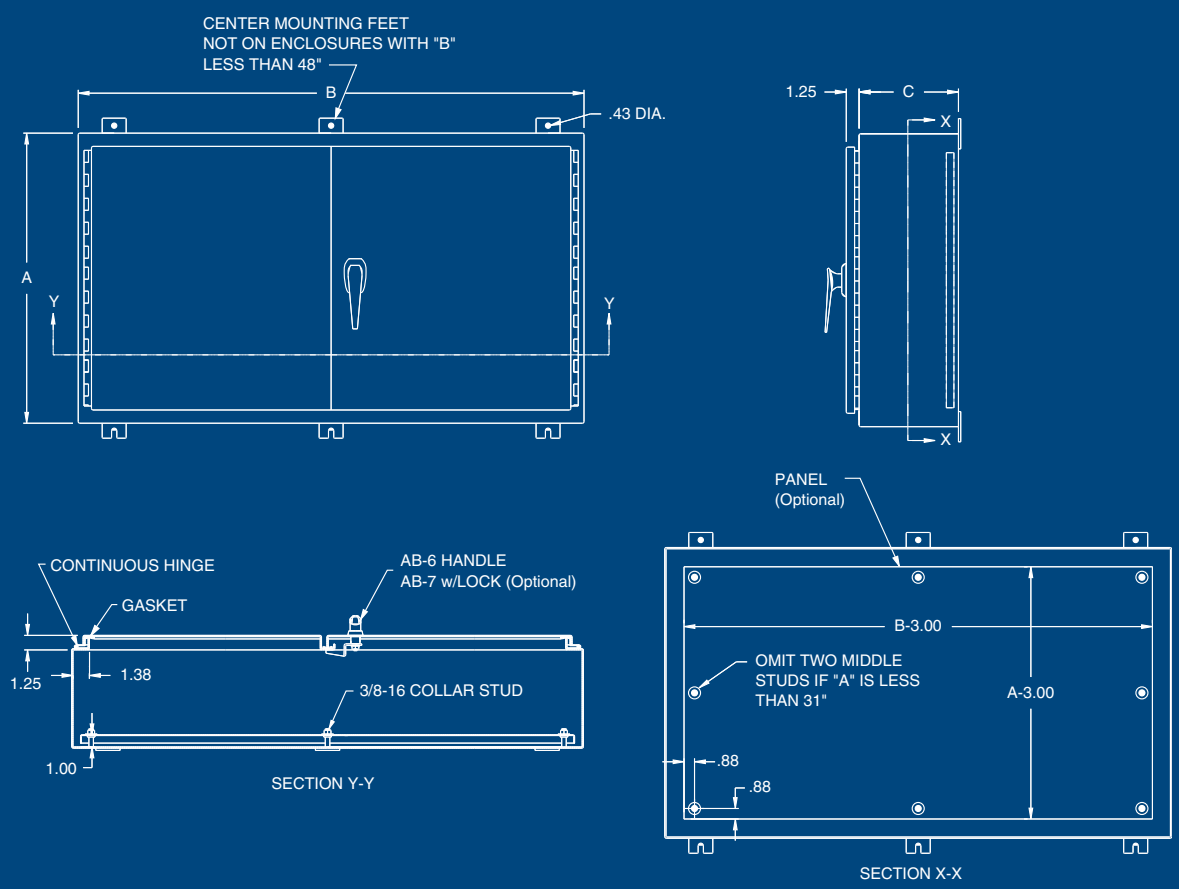

INDUSTRY STANDARDS	
UL 50	Type 12
UL 508	Type 12
NEMA	Type 12
CUL	Type 12

Austin Electrical Enclosures
Post Office Box 2320
Yadkinville, NC 27055

Phone: 336.468.2851
800.288.2851

NEMA 12 DOUBLE DOOR WALL MOUNT ENCLOSURES
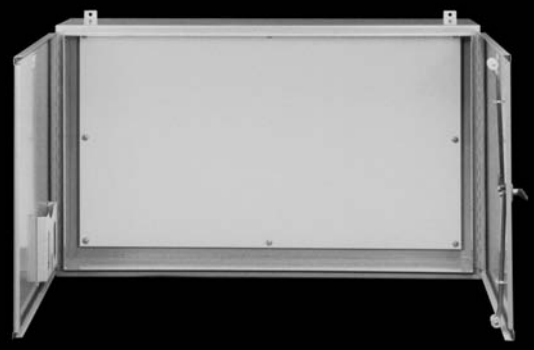
Catalog Number	Enclosure Size (AxBxC)	Weight	Panel Catalog Number
AB-24428WDN	24x42x8	67	AB-4224TP
AB-24488WDN	24x48x8	75	AB-4824TP
AB-304210WDN	30x42x10	103	AB-4230TP
AB-304810WDN	30x48x10	116	AB-4830TP
AB-306010WDN	30x60x10	141	AB-6030TP
AB-364212WDN	36x42x12	128	AB-4236TP
AB-364812WDN	36x48x12	166	AB-4836TP
AB-366012WDN	36x60x12	201	AB-6036TP
AB-426012WDN	42x60x12	228	AB-6042TP